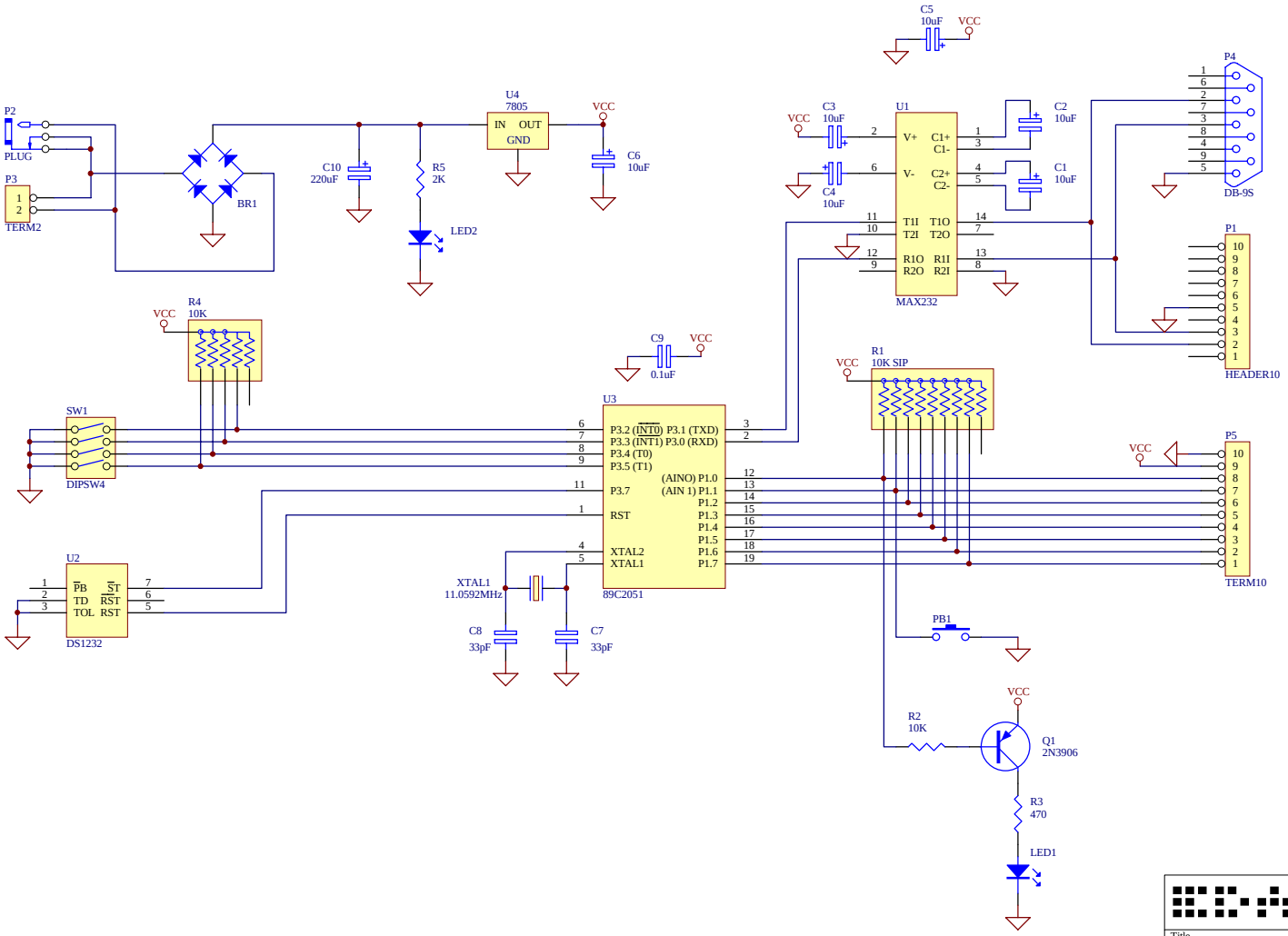

Electronic Design Associates
P.O. Box 680344, Franklin, TN 37068

Title: **SBC-2051**		
Size: B	Number:	Revision: A
Date: 28-Dec-1996	Sheet 1 of 1	
File: C:\SBC2051\SCH\REVA\SBC2051.SCH	Drawn By: WAR	