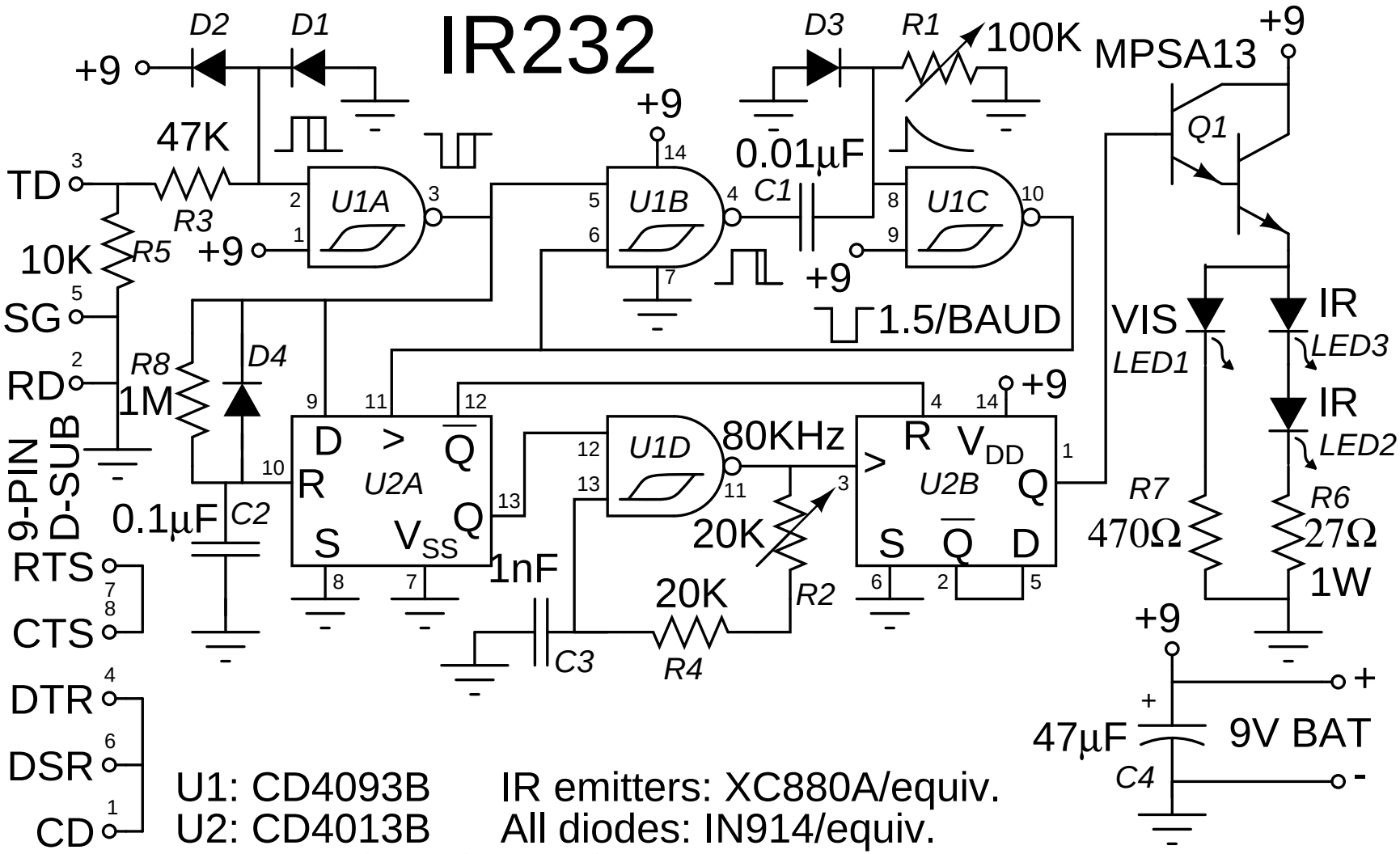

U1: CD4093B IR emitters: XC880A/equiv.
U2: CD4013B All diodes: IN914/equiv.
IR232 Serial to infrared remote converter
John H. DuBois III (john@armory.com) Dec 1991