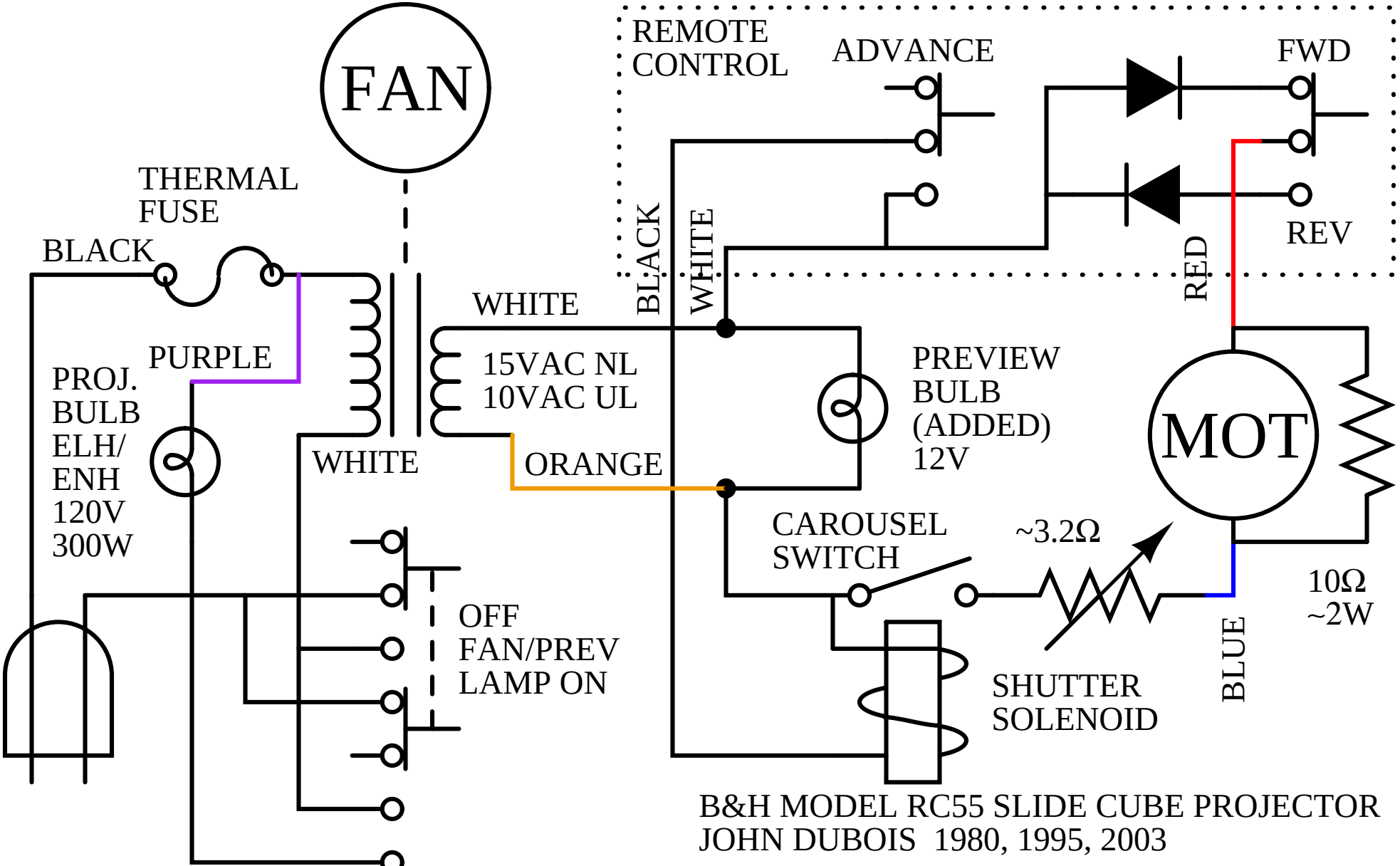

B&H MODEL RC55 SLIDE CUBE PROJECTOR
JOHN DUBOIS 1980, 1995, 2003