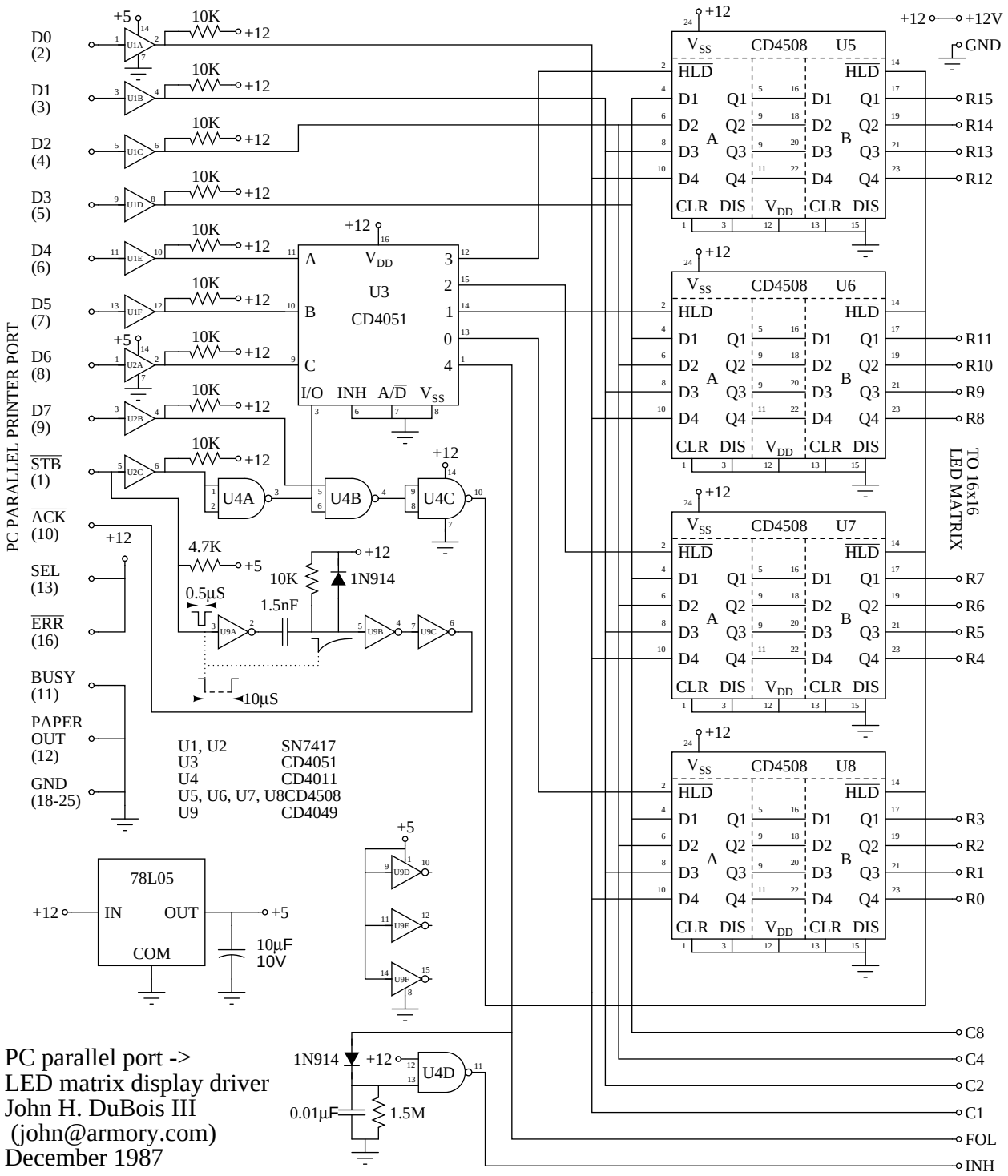

PC parallel port ->
LED matrix display driver
John H. DuBois III
(john@armory.com)
December 1987